YAMAHA
YZF-R1 2007-2008

FITTING INSTRUCTIONS
TO BE FITTED BY A QUALIFIED TECHNICIAN

GBRacing®
World Class Motorcycle Protection

THIS SHEET INCLUDES FITTING INSTRUCTIONS FOR THE FOLLOWING PARTS:
Secondary Alternator Cover Part No. EC-R1-2007-1-GBR / Secondary Clutch Cover Part No. EC-R1-2007-2-GBR / Secondary Pulse Cover Part No. EC-R1-2007-3-GBR / Secondary Crank Cover Part No. EC-R1-2007-4-GBR
Frame Sliders/Crash Mushrooms Set Part No. CP-R1-2007-SET-GBR / Paddock Stand / Bobbin Set Part No. BA12-6-GBR-SET / Lower Chain Guard Part No. CGA08-GBR / Brake Lever Guard Part No: BLG-R1-2006-GBR / Clutch Lever Guard Part No: CLG-R1-2006-GBR

FIM QUALITY PRODUCT — GBRacing ENGINE PROTECTIONS 2021 - 2023

SECONDARY ALTERNATOR COVER – PART NO. EC-R1-2007-1-GBR

1. Remove the Belly Pan (Not Applicable for FZ8/FZ1).
2. Remove 3 off existing bolts on the stock aluminium Alternator cover, corresponding to the STOCK Secondary Engine Alternator Cover. Shown as bolt positions 1,2 & 3.
   Note: Retain the steel bracket found at Bolt Position 1, in place.
   (If bracket is not present use M6 washers to space accordingly).
3. Place the Secondary Engine Alternator cover over the stock aluminium alternator cover. Loosely screw down Bolt 1, lining up the Steel Bracket, then the remaining Bolts as supplied, M6x35mm Cap Head Bolts.
4. Tighten all 3 bolts to a torque of 10 N/m as per Manufacturer's recommendations.
   DO NOT OVERTIGHTEN
5. Refit the Belly Pan.

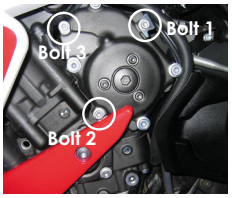

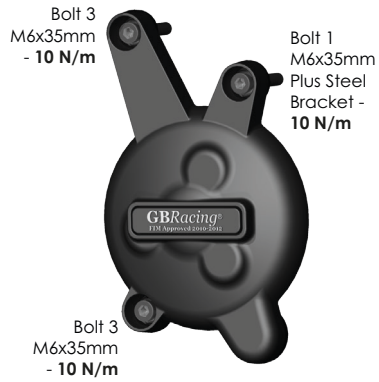

SECONDARY CLUTCH COVER – PART NO. EC-R1-2007-2-GBR

1. Remove the Belly Pan, retaining Stock Bolt 2.
2. Remove 3 off existing bolts on the aluminium Clutch cover, corresponding to the Secondary Engine Clutch Cover. Shown as bolt positions 1,3 & 4.
3. Place the Secondary Engine Clutch Cover over the stock aluminium clutch cover, making sure that the clutch arm extension cover is held in place.
   Loosely screw down Bolt position 1 using the supplied M6x45mm Bolt, then bolts 3 & 4 using the supplied M6 x 20mm bolts & M6 Washers.
4. Refit the Belly Pan & Bolt 2. <u>Note:</u> For Race Fairings, the rubber spacers from the Stock Fairing at Bolt Position 2 should be reused.
5. Tighten Bolts to a torque of 10 N/m as per manufacturer's recommendations.
   DO NOT OVERTIGHTEN

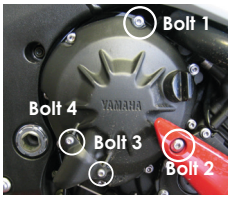

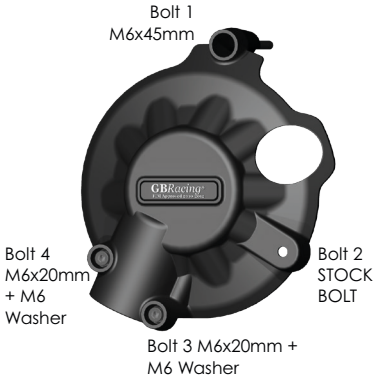

SECONDARY PULSE COVER – PART NO. EC-R1-2007-3-GBR

1. Remove the Belly Pan, retaining Stock Bolt 4.
2. Remove 3 off existing bolts on the aluminium Pulse cover, corresponding to the Secondary Engine Pulse Cover. Shown as bolt positions 1,2 & 3.
3. Holding back the fairing, place the Secondary Engine Pulse cover over the stock alumunium pulse cover. Loosely screw down Bolts 1, 2 & 3 using the supplied M6x25mm Bolts.
4. Tighten all 3 bolts to a torque of 10 N/m as per Manufacturer's recommendations.
5. Screw down the remaining stock Bolt 4, to tighten the fairing back.
   DO NOT OVERTIGHTEN

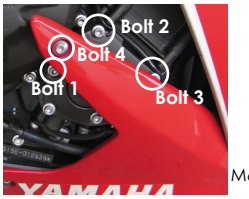

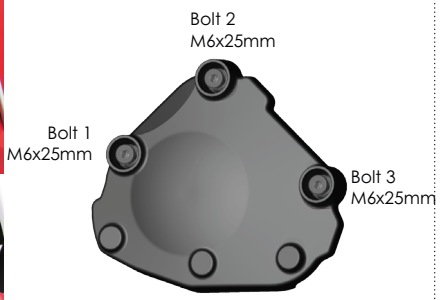

SECONDARY CRANK COVER – KIT – PART NO. EC-R1-2007-4-GBR

1. Remove the Belly Pan, retaining Stock Bolt 3.
2. Remove 2 off existing bolts on the aluminium Crank cover, corresponding to the Secondary Engine Crank Cover, shown as bolt positions 1 & 2. The Steel fairing bracket is no longer required.
3. Place the Secondary Engine Crank cover over the stock aluminium Crank cover. Loosely screw down Bolts 1 & 2 with the supplied M6x25mm bolts.
4. Tighten Bolts to a torque of 10 N/m as per Manufacturer's recommendations.
   DO NOT OVERTIGHTEN
   Note: For race fairings, the rubber spacers from the stock fairing at Bolt Position 3 should be reused.
5. Refit the fairing, securing Bolt 3 to the integrated M6 insert, thus negating the need for the stock steel fairing bracket.

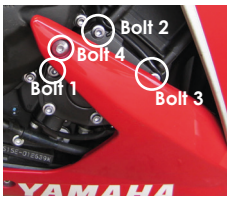

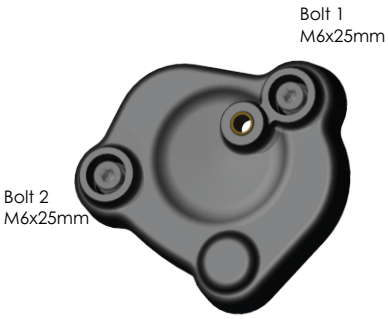

FITTING INSTRUCTIONS
TO BE FITTED BY A QUALIFIED TECHNICIAN

FRAME SLIDERS / CRASH MUSHROOMS - RIGHT HAND SIDE - PART NO. CP-R1-2007-RHS-GBR

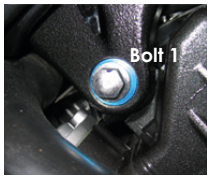

1 Remove Fairing & Top Engine mounting bolt, shown at Bolt 1 position.
Note :- Retain the Blue Anodised Bush assembly.
2 Assemble the Black Aluminium Bracket into Bolt Position 1 using the supplied M10 x 60mm bolt & M10 Washer, and re fit the Blue Anodised Bush assembly as shown below. Tighten the bolt to 48 Nm Torque, as per Manufacturer's recommendations. DO NOT OVERTIGHTEN.
3 Re assemble the fairing.
4 Assemble the Moulded Crash Mushroom CPF1-GBR to the Black Aluminium bracket, with the supplied M10 x 65mm A2 Stainless Steel Bolt. Tighten to 25 Nm Torque.

FRAME SLIDERS / CRASH MUSHROOMS - LEFT HAND SIDE - PART NO. CP-R1-2007-LHS-GBR

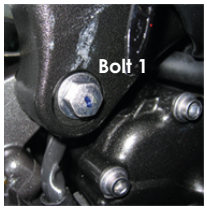

1 Remove Fairing & Top Engine mounting bolt, shown at Bolt 1 position.
2 Assemble the Black Aluminium Bracket into Bolt Position 1 using the supplied M10 x 60mm bolt & M10 Washer. Tighten bolt to 48 Nm Torque, as pe Manufacturer's recommendations. DO NOT OVERTIGHTEN.
3 Re assemble the fairing.
4 Assemble the Moulded Crash Mushroom CPF1-GBR to the Black Aluminium bracket, with the supplied M10 x 65mm A2 Stainless Steel Bolt. Tighten to 25 Nm Torque.

PADDOCK STAND / BOBBIN SET
PART NO. BA12-6-GBR-SET

1 Assemble M6 x 40mm Bolt & M6 Washer fthrough the moulded bobbin.
2 Tighten bolts to swing arm boss, 8 Nm.
DO NOT OVERTIGHTEN

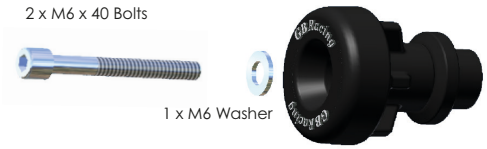

LOWER CHAIN GUARD – PART NO. CGA08-GBR

1 Position the Lower Chain Guard on to the underside of the swing arm & mark off the hole centres.
Note: There should be a 5mm minimum gap from the bike chain to the Lower Chain Guard. On some models there may be an overhang on the swing arm. It may help to reverse the Lower Chain Guard in order to ease marking the hole centres.
2 Drill & Tap 2 off marked holes M6 - (Drill 5mm Dia. for tapping)
3 Assemble 2 off M6 washers onto 2 off M6 x 20mm Bolts.

SETS & BUNDLES: Protection Bundle: CP-R1-2007-CS-GBR: EC-R1-2007-1-GBR, EC-R1-2007-2-GBR, EC-R1-2007-3-GBR, CP-R1-2007-SET-GBR BA12-6-GBR-SET
Engine Cover Set: EC-R1-2007-SET-GBR: EC-R1-2007-1-GBR, EC-R1-2007-2-GBR, EC-R1-2007-3-GBR

YAMAHA R1 BRAKE LEVER GUARD – PART NO. BLG-R1-2006-GBR

STOCK ONLY

FITS MODELS 2006-2022

Please note: Must use Thread Lock (not supplied) for correct operation.

1 Remove existing bar end assembly.

2 Assemble bolt through lever guard into spacer (shown in **Fig.1**) and then insert into handlebar end and tighten M6 Bolt to **15Nm** - **DO NOT OVERTIGHTEN**.

Note: Please be aware that there will still be apparent movement in the lever protector due to the fact it is rubber mounted.

Do not ride if you are unsure if it is tight enough and always get a trained technician to confirm.

YAMAHA R1 CLUTCH LEVER GUARD – PART NO. CLG-R1-2006-GBR

STOCK ONLY

FITS MODELS 2006-2022

Please note: Must use Thread Lock (not supplied) for correct operation.

*bv*1 Remove existing bar end assembly.

2 Assemble bolt through lever guard into spacer (shown in **Fig.1**) and then insert into handlebar end and tighten M6 Bolt to **15Nm** - **DO NOT OVERTIGHTEN**.

Note: Please be aware that there will still be apparent movement in the lever protector due to the fact it is rubber mounted.

Do not ride if you are unsure if it is tight enough and always get a trained technician to confirm.

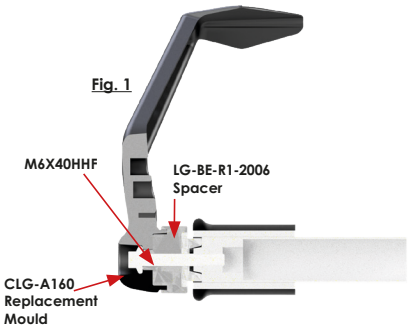

DO NOT use these products unless you agree to our Terms & Conditions, as shown on our paperwork and website. If you do not agree, please return the product(s) to your dealer for a refund.