HAND BUILT IN ENGLAND

Bike	Triumph Scrambler 400 X & XC	**Part No.**	ETR-97
Year	2024-Current	**Fit Kit**	Z039.10776
Notes	Where not supplied use original fittings	**dB Killer**	SCEXDBK53 - (Type AF)

Estimated Fitting Time: 60 Minutes

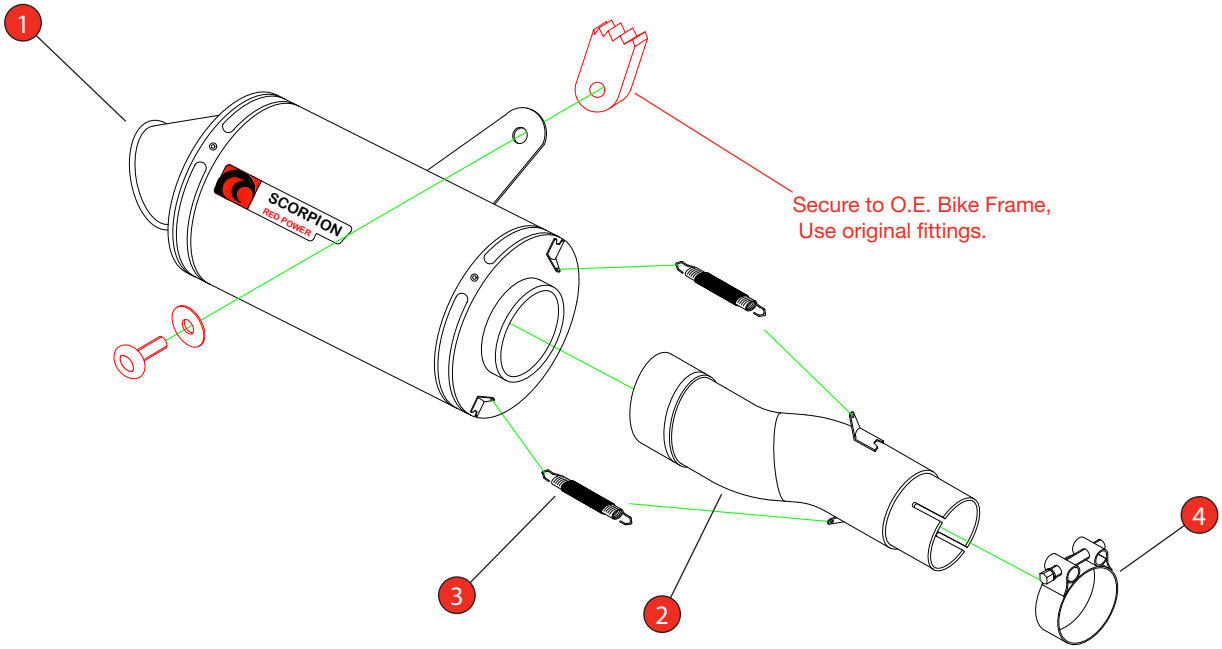

NO.	PART NO.	DESCRIPTION	QTY
1	ESC557	Edge Oval Silencer	1
2	CP1240	Connecting Pipe	1
Fit Kit - Z039.10776			
3	Z028.10030	Rubber Coated Spring	2
4	Z016.10008	43-47mm Clamp	1

CLASSIFICATION	UK Road Legal
EC APPROVED	No
MARKING	BS AU 193a: 1990/T3
DATE	02/10/2025
ISSUE	00
AUTHORISED	G O'Shea

NOTE: ENSURE SCORPION SYSTEM IS CLEAR OF MOVING PARTS AND ALL ORIGINAL FUNCTIONS WORK CORRECTLY.

SCORPION RED POWER

SCORPION // FITTING INSTRUCTIONS

HAND BUILT IN ENGLAND

Bike	Triumph Scrambler 400 X & XC	**Part No.**	ETR-97
Year	2024-Current	**Fit Kit**	Z039.10776
Notes	Where not supplied use original fittings	**dB Killer**	SCEXDBK53 - (Type AF)

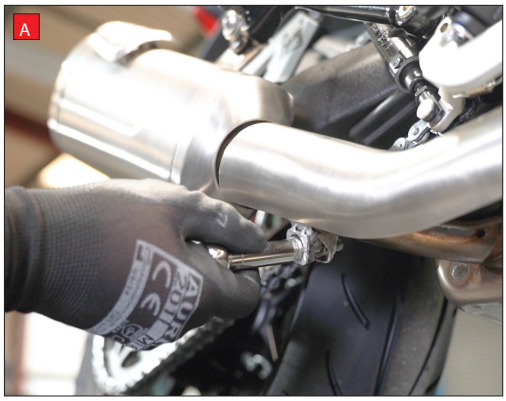

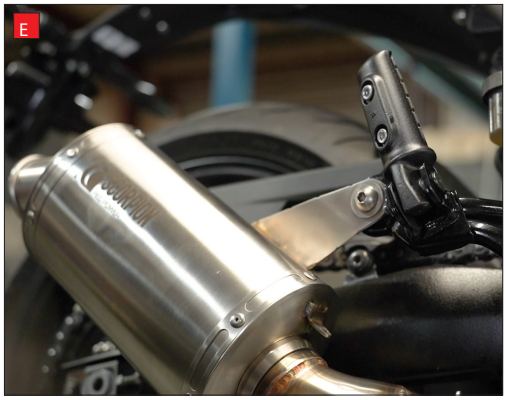

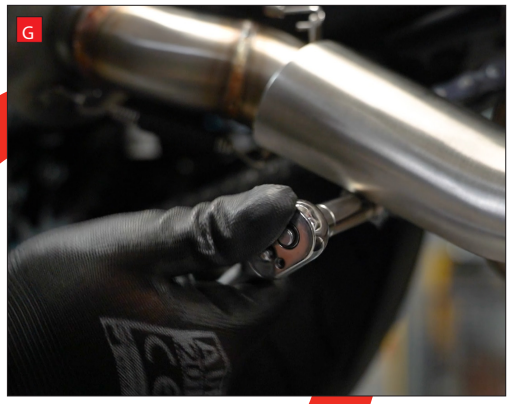

NOTE: The photos show a Speed 400, however fitting is the same.

A) Loosen the exhaust clamp.

B) Remove the silencer mounting bolt.

C) Carefully remove the original silencer.

D) Slide the Scorpion connecting pipe, with the clamp, on to the original exhaust.

E) Slide the Scorpion silencer on to the connecting pipe. Secure in place with the original mounting bolt. Leave loose for now, you will fully tighten in a later step.

F) Fit the springs between the spring hoops on the silencer and connecting pipe.

G) Fully tighten the exhaust clamp.

H) Fully tighten the silencer mounting bolt.

When fitted take bike for a short ride to ensure all functions are correct. When bike & exhaust are cool enough check all nuts and bolts are still secure.

HAND BUILT IN ENGLAND

Bike	Triumph Scrambler 400 X & XC	**Part No.**	ETR-97
Year	2024-Current	**Fit Kit**	Z039.10776
Notes	Where not supplied use original fittings	**dB Killer**	SCEXDBK53 - (Type AF)

Estimated Fitting Time: 60 Minutes

Thank you for purchasing your Scorpion Silencer.
Care of your exhaust: Please refrain from cleaning silencer with heavy solvents or abrasives!

Vielen Dank Fur den kauf eines Scorpion Schalldampfers! Pflegehinweis: Bitte verwenden Sie niemals Scheuermittel oder aggressive Reiniger zur Pflege Ihres Auspuffes!

Merci d'avoir choisi un echappement Scorpion.
Entretien de votre silencieux: Ne pas utiliser de solvants ou de produits abrasifs!

Muchas gracias por adquirir un Silencioso Scorpion. Le recomendamos no limpiar el silencioso con productos abrasivos o aquellos que contengan disolventes.